Defender™ Series Base
Instruction Manual

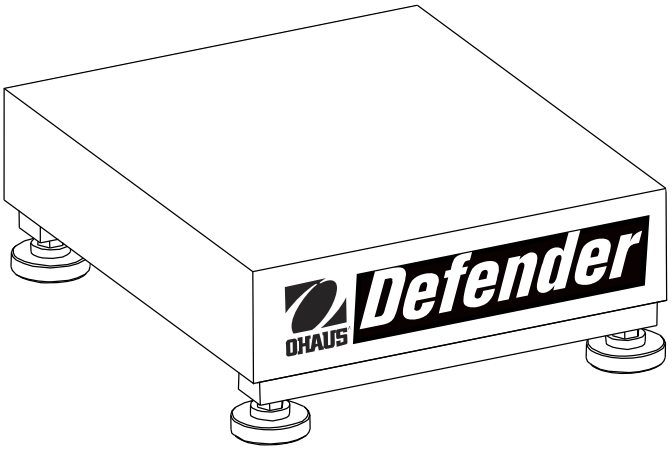

Compliance

This product conforms to the EMC directive 2004/108/EC and the Low Voltage Directive 2006/95/EC.
The complete declaration of Conformity is available from Ohaus Corporation

Disposal

In conformance with the European Directive 2002/96 EC on Waste Electrical and Electronic Equipment (WEEE) this device may not be disposed of in domestic waste. This also applies to countries outside the EU, per their specific requirements.

Please dispose of this product in accordance with local regulations at the collecting point specified for electrical and electronic equipment.

If you have any questions, please contact the responsible authority or the distributor from which you purchased this device.

Should this device be passed on to other parties (for private or professional use), the content of this regulation must also be related.

Thank you for your contribution to environmental protection.

ISO 9001 Registration

In 1994, Ohaus Corporation, USA, was awarded a certificate of registration to ISO 9001 by Bureau Veritus Quality International (BVQI), confirming that the Ohaus quality management system is compliant with the ISO 9001 standard's requirements. On May 15, 2003, Ohaus Corporation, USA, was re-registered to the ISO 9001:2000 standard.

INTRODUCTION

This manual covers installation, and maintenance instructions for the Ohaus Defender™ Series Base. Please read this manual completely before installation and operation.

SAFETY PRECAUTIONS

For safe and dependable operation of this product, please comply with the following precautions:

- Operate the base only under ambient conditions specified in these instructions
- Ensure that the load cell cable does not pose an obstruction or tripping hazard
- Do not operate the base in hazardous environments or unstable locations
- Do not drop loads on the base
- Do not lift the base by the top frame; always lift from the bottom frame when moving the base
- Service should only be performed by authorized personnel

INSTALLATION

Unpacking

Unpack and inspect the product to make sure that all components have been included. The package includes the following:

- Defender™ Series Base
- Weighing Pan
- Instruction Manual

When purchased as a complete Defender Series Scale, the package will also include:

- Indicator
- Column Assembly (optional)

ASSEMBLY

Weighing Pan

Place the weighing pan securely over the rubber load pads on the top frame of the base.

Wiring Connections

DxxxHx, DxxxQx, and DxxxRx Bases

When connecting the DxxxHx, DxxxQx, or DxxxRx base to an Ohaus indicator equipped with the matching circular connector, push the base connector onto the indicator connector and turn the locking ring clockwise to lock it in place.

When connecting the DxxxHx, DxxxQx, or DxxxRx base to an indicator that does not have the matching connector, install the optional load cell cable adapter (P/N 80500736 sold separately) to the indicator using the wiring codes in Table 1. Then attach the load cell cable to the cable adapter.

Note: As an alternate wiring method, cut off the connector, strip the wires and attach them to the indicator using the wiring codes in Table 1.

DxxxWx Bases

Install the load cell cable to an indicator using the wiring codes in Table 1.

Note: When purchased as a Defender Series Scale, the DxxxWx base is already pre-wired to the indicator.

TABLE 1. LOAD CELL CONNECTION

FUNCTION	WIRE COLOR
+ Excitation	Green
- Excitation	Black
+ Signal	Red
- Signal	White
+ Sense	Blue
- Sense	Brown
Shield	Yellow

Selecting the Location

To ensure accuracy, proper performance and safety, locate and operate the base on a stable, level surface. Avoid locations with rapid temperature changes or excessive dust, air currents, vibrations, electromagnetic fields or heat.

Level the base by adjusting the four leveling feet until the bubble in the level indicator is centered. A wrench may be needed to loosen the locking nut above each leveling foot. When the base is level, retighten the locking nuts up against the base to lock each foot into place.

Note: Ensure that the base is level each time its location is changed.

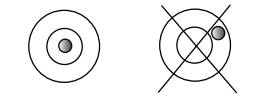

MAINTENANCE

Cleaning

The base components should be kept clean and free of excessive material build up.

- A damp cloth with water and a mild detergent may be used to wipe clean the external surfaces – do not use acids, alkalis, strong solvents or abrasive materials.

To maintain surface integrity, do not allow food particles or liquids to remain on the surface of the painted or stainless steel base frame.

- Remove the pan and use fresh water to clean the base frame surface of any food particles or liquids. Dry the base with a clean cloth or allow to air dry before replacing the pan. Repeat daily for best care.

Troubleshooting

Aside from installing components and leveling adjustments, the Defender Series Base does not require any other adjustments as shipped from the factory.

Operational difficulties that may be encountered can often be traced to simple causes such as:

- Loose or incorrect wiring connections
- Obstructions to the base frame
- Unstable environments
- Incorrect calibration or setup of the indicator

If the troubleshooting section does not resolve or describe your problem, contact your authorized Ohaus service agent. For service assistance or technical support in the United States call toll-free 1-800-526-0659 between 8:00 AM and 5:00 PM EST. An Ohaus product service specialist will be available to provide assistance. Outside the USA, please visit our web site, www.ohaus.com to locate the Ohaus office nearest you.

TECHNICAL DATA

Technical Specifications

The technical data is valid under the following ambient conditions:
Ambient temperature: -10ºC to +40 ºC
Relative humidity: 10% to 90% relative humidity, non-condensing
Height above sea level: Up to 4,000m
Operability is assured at ambient temperature -10ºC to +40 ºC

Note: not all models may be available in your area. Check with your local Ohaus representative.

TABLE 2.1 SPECIFICATIONS

MODEL	D15HR	D30HR	D60HR
Capacity	15 kg / 30 lb	30 kg / 60 lb	60 kg / 150 lb
Approved Resolution	OIML: 3000e, NTEP: 3000d		
Safe Overload Capacity	150% of capacity		
Pan Dimensions	305 x 355 mm / 12 x 14 in		
Base Construction	Stainless Steel platform with painted steel frame and rubber leveling feet		
Repeatability (std. deviation)	1d		
Linearity	±1d		
Load Cell Capacity	30 kg	50 kg	100 kg
Load Cell Cable	2 m L x 6-wire		
Load Cell Type	350 Ohm, aluminum, single point		
Load Cell Excitation	5-15V DC/AC		
Load Cell Rated Output	2mV/V		
Load Cell Protection	IP67		
Net Weight	9 kg / 19.8 lb		
Shipping Weight	10.9 kg / 24 lb		

TABLE 2.2. SPECIFICATIONS

MODEL	D60HL	D100HL	D150HX	D300HX
Capacity	60 kg / 100 lb	100 kg / 250 lb	150 kg / 300 lb	300 kg / 600 lb
Approved Resolution	OIML: 3000e, NTEP: 3000d	OIML: 3000e, NTEP: 2500d	OIML: 3000e, NTEP: 3000d	
Safe Overload Capacity	150% of capacity			
Pan Dimensions	400 x 500 mm / 15.7 x 19.7 in		420 x 550 mm / 16.5 x 21.6 in	
Base Construction	Stainless Steel platform with painted steel frame and rubber leveling feet			
Repeatability (std. deviation)	1d			
Linearity	±1d			
Load Cell Capacity	100 kg	150 kg	300 kg	500 kg
Load Cell Cable	2 m L x 6-wire			
Load Cell Type	350 Ohm, aluminum, single point			
Load Cell Excitation	5-15V DC/AC			
Load Cell Rated Output	2mV/V			
Load Cell Protection	IP67			
Net Weight	19.1 kg / 42.1 lb		24.5 kg	
Shipping Weight	22 kg / 48.5 lb		27.1 kg / 59.7 lb	

TABLE 2.3 SPECIFICATIONS

MODEL	D10QR	D15QR	D25QR	D30QR	D50QL
Capacity	10 kg / 25 lb	15 kg / 30 lb	25 kg / 50 lb	30 kg / 60 lb	50 kg / 100 lb
Approved Resolution	NTEP: 5000d	OIML: 3000e	NTEP: 5000d	OIML: 3000e	NTEP: 5000d
Safe Overload Capacity	150% of capacity				
Pan Dimensions	305 x 305 mm / 12 x 12 in				457 x 457 mm / 18 x 18 in
Base Construction	Stainless Steel platform with painted steel frame and rubber leveling feet				
Repeatability (std. deviation)	1d				
Linearity	±1d				
Load Cell Capacity	30 kg	30 kg	50 kg	50 kg	100 kg
Load Cell Cable	2.5 m L x 6-wire				
Load Cell Type	350 Ohm, aluminum, single point				
Load Cell Excitation	5-15V DC/AC				
Load Cell Rated Output	2mV/V				
Load Cell Protection	IP67				
Net Weight	12.2 kg / 26.9 lb				27.2 kg / 60 lb
Shipping Weight	14.2 kg / 31.3 lb				29 kg / 64 lb

TABLE 2.4 SPECIFICATIONS

MODEL	D60QL	D100QL	D150QL	D250QX	D300QX
Capacity	60 kg / 150 lb	100 kg / 250 lb	150 kg / 300 lb	250 kg / 500 lb	300 kg / 600 lb
Approved Resolution	OIML: 3000e	NTEP: 5000d	OIML: 3000e	NTEP: 5000d	OIML: 3000e
Safe Overload Capacity	150% of capacity				
Pan Dimensions	457 x 457 mm / 18 x 18 in			610 x 610 mm / 24 x 24 in	
Base Construction	Stainless Steel platform with painted steel frame and rubber leveling feet				
Repeatability (std. deviation)	1d				
Linearity	±1d				
Load Cell Capacity	100 kg	150 kg	200 kg	500 kg	500 kg
Load Cell Cable	2.5 m L x 6-wire				
Load Cell Type	350 Ohm, aluminum, single point				
Load Cell Excitation	5-15V DC/AC				
Load Cell Rated Output	2mV/V				
Load Cell Protection	IP67				
Net Weight	27.2 kg / 60 lb			35 kg / 77 lb	
Shipping Weight	29 kg / 64 lb			41 kg / 90 lb	

TABLE 2.5 SPECIFICATIONS

MODEL	D10WR	D15WR	D25WR	D30WR	D50WL
Capacity	10 kg / 25 lb	15 kg / 30 lb	25 kg / 50 lb	30 kg / 60 lb	50 kg / 100 lb
Approved Resolution	NTEP: 5000d	OIML: 3000e	NTEP: 5000d	OIML: 3000e	NTEP: 5000d
Safe Overload Capacity	150% of capacity				
Pan Dimensions	305 x 305 mm / 12 x 12 in				457 x 457 mm / 18 x 18 in
Base Construction	Stainless Steel platform with stainless steel frame and rubber leveling feet				
Repeatability (std. deviation)	1d				
Linearity	±1d				
Load Cell Capacity	30 kg	30 kg	50 kg	50 kg	100 kg
Load Cell Cable	2.5 m L x 6-wire				
Load Cell Type	350 Ohm, stainless steel, single point				
Load Cell Excitation	5-15V DC/AC				
Load Cell Rated Output	2mV/V				
Load Cell Protection	IP67				
Net Weight	12.2 kg / 26.9 lb				27.2 kg / 60 lb
Shipping Weight	14.2 kg / 31.3 lb				29 kg / 64 lb

TABLE 2.6 SPECIFICATIONS

MODEL	D60WL	D100WL	D150WL	D250WX	D300WX
Capacity	60 kg / 150 lb	100 kg / 250 lb	150 kg / 300 lb	250 kg / 500 lb	300 kg / 600 lb
Approved Resolution	OIML: 3000e	NTEP: 5000d	OIML: 3000e	NTEP: 5000d	OIML: 3000e
Safe Overload Capacity	150% of capacity				
Pan Dimensions	457 x 457 mm / 18 x 18 in			610 x 610 mm / 24 x 24 in	
Base Construction	Stainless Steel platform with stainless steel frame and rubber leveling feet				
Repeatability (std. deviation)	1d				
Linearity	±1d				
Load Cell Capacity	100 kg	200 kg	200 kg	500 kg	500 kg
Load Cell Cable	2.5 m L x 6-wire				
Load Cell Type	350 Ohm, stainless steel, single point				
Load Cell Excitation	5-15V DC/AC				
Load Cell Rated Output	2mV/V				
Load Cell Protection	IP67				
Net Weight	27.2 kg / 60 lb			35 kg / 77 lb	
Shipping Weight	29 kg / 64 lb			41 kg / 90 lb	

TABLE 2.7 SPECIFICATIONS

MODEL	D5RS	D6RS	D10RS	D15RS	D25RR	D30RR
Capacity	5 kg / 10 lb	6 kg / 15 lb	10 kg / 25 lb	15 kg / 30 lb	25 kg / 50 lb	30 kg / 60 lb
Approved Resolution	NTEP: 5000d	OIML: 3000e	NTEP: 5000d	OIML: 3000e	NTEP: 5000d	OIML: 3000e
Safe Overload Capacity	150% of capacity					
Pan Dimensions	240 x 300 mm / 9.4 x 11.8 in				300 x 400 mm / 11.8 x 15.7 in	
Base Construction	Stainless Steel platform with painted steel frame and rubber leveling feet					
Repeatability (std. deviation)	1d					
Linearity	±1d					
Load Cell Capacity	11 kg		22 kg		50 kg	
Load Cell Cable	1 m L x 6-wire				2 m L x 6-wire	
Load Cell Type	350 Ohm, aluminum, single point					
Load Cell Excitation	5-15V DC/AC					
Load Cell Rated Output	2mV/V					
Load Cell Protection	IP65					
Net Weight	5.9 kg / 13 lb				9.9 kg / 22 lb	
Shipping Weight	8.1 kg / 18 lb				12 kg / 26.5 lb	

TABLE 2.8 SPECIFICATIONS

MODEL	D50RR	D50RL	D50RX	D60RR	D60RL	D60RX
Capacity	50 kg / 100 lb	50 kg / 100 lb	50 kg / 100 lb	60 kg / 150 lb	60 kg / 150 lb	60 kg / 150 lb
Approved Resolution	NTEP: 5000d	NTEP: 5000d	NTEP: 5000d	OIML: 3000e	OIML: 3000e	OIML: 3000e
Safe Overload Capacity	150% of capacity					
Pan Dimensions	300 x 400 mm 11.8 x 15.7 in	400 x 500 mm 15.7 x 19.7 in	500 x 650 mm 19.7 x 25.6 in	300 x 400 mm 11.8 x 15.7 in	400 x 500 mm 15.7 x 19.7 in	500 x 650 mm 19.7 x 25.6 in
Base Construction	Stainless Steel platform with painted steel frame and rubber leveling feet					
Repeatability (std. deviation)	1d					
Linearity	±1d					
Load Cell Capacity	100 kg					
Load Cell Cable	2 m L x 6-wire	2.5 m L x 6-wire		2 m L x 6-wire	2.5 m L x 6-wire	
Load Cell Type	350 Ohm, aluminum, single point					
Load Cell Excitation	5-15V DC/AC					
Load Cell Rated Output	2mV/V					
Load Cell Protection	IP65					
Net Weight	9.9 kg / 22 lb	19.4kg / 43lb	22.3 kg / 49 lb	9.9 kg / 22 lb	19.4 kg / 43 lb	22.3 kg / 49 lb
Shipping Weight	12 kg / 26.5 lb	22.3kg / 49lb	27.8 kg / 61 lb	12 kg / 26.5 lb	22.3 kg / 49 lb	27.8 kg / 61 lb

TABLE 2.9 SPECIFICATIONS

MODEL	D100RL	D100RX	D100RV	D150RL	D150RX
Capacity	100 kg / 250 lb	100 kg / 250 lb	100 kg / 250 lb	150 kg / 300 lb	150 kg / 300 lb
Approved Resolution	NTEP: 5000d	NTEP: 5000d	NTEP: 5000d	OIML: 3000e	OIML: 3000e
Safe Overload Capacity	150% of capacity				
Pan Dimensions	400 x 500 mm 15.7 x 19.7 in	500 x 650 mm 19.7 x 25.6 in	600 x 800 mm 23.6 x 31.5 in	400 x 500 mm 15.7 x 19.7 in	500 x 650 mm 19.7 x 25.6 in
Base Construction	Stainless Steel platform with painted steel frame and rubber leveling feet				
Repeatability (std. deviation)	1d				
Linearity	±1d				
Load Cell Capacity	250 kg				
Load Cell Cable	2.5 m L x 6-wire				
Load Cell Type	350 Ohm, aluminum, single point				
Load Cell Excitation	5-15V DC/AC				
Load Cell Rated Output	2mV/V				
Load Cell Protection	IP65				
Net Weight	19.4 kg / 43 lb	22.3 kg / 49 lb	36.8 kg / 81 lb	19.4 kg / 43 lb	22.3 kg / 49 lb
Shipping Weight	22.3 kg / 49 lb	27.8 kg / 61 lb	63.2 kg / 139 lb	22.3 kg / 49 lb	27.8 kg / 61 lb

TABLE 2.10 SPECIFICATIONS

MODEL	D150RV	D250RX	D250RV	D300RX	D300RV
Capacity	150 kg / 300 lb	250 kg / 500 lb	250 kg / 500 lb	300 kg / 600 lb	300 kg / 600 lb
Approved Resolution	OIML: 3000e	NTEP: 5000d	NTEP: 5000d	OIML: 3000e	OIML: 3000e
Safe Overload Capacity	150% of capacity				
Pan Dimensions	600 x 800 mm 23.6 x 31.5 in	500 x 650 mm 19.7 x 25.6 in	600 x 800 mm 23.6 x 31.5 in	500 x 650 mm 19.7 x 25.6 in	600 x 800 mm 23.6 x 31.5 in
Base Construction	Stainless Steel platform with painted steel frame and rubber leveling feet				
Repeatability (std. deviation)	1d				
Linearity	±1d				
Load Cell Capacity	250 kg	500 kg			
Load Cell Cable	2.5 m L x 6-wire				
Load Cell Type	350 Ohm, aluminum, single point				
Load Cell Excitation	5-15V DC/AC				
Load Cell Rated Output	2mV/V				
Load Cell Protection	IP65				
Net Weight	36.8 kg / 81 lb	22.3 kg / 49 lb	36.8 kg / 81 lb	22.3 kg / 49 lb	36.8 kg / 81 lb
Shipping Weight	63.2 kg / 139 lb	27.8 kg / 61 lb	63.2 kg / 139 lb	27.8 kg / 61 lb	63.2 kg / 139 lb

Drawings

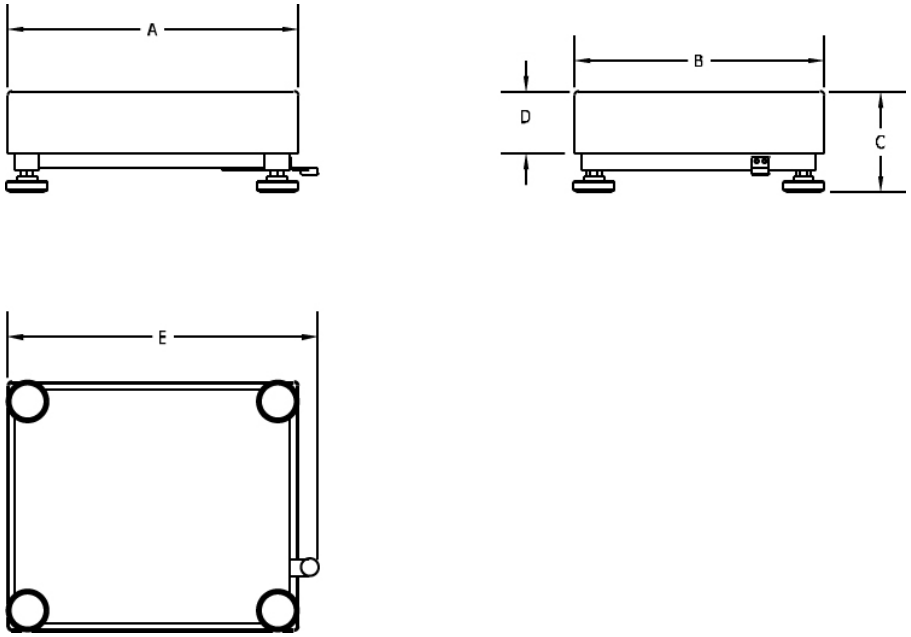

Figure 1. Defender Base Dimension Drawing.

TABLE 3. DIMENSIONS

Base	A	B	C	D	E
	Pan Depth	Pan Width	Height of Pan to Surface of Table*	Height of Pan	Depth Including Level Indicator
DxxxHR	355 mm	305 mm	95 mm	50 mm	385 mm
DxxxHL	500 mm	400 mm	105 mm	60 mm	530 mm
DxxxHX	550 mm	420 mm	125 mm	70 mm	580 mm
DxxQR, DxxxWR	305 mm	305 mm	95 mm	52 mm	335 mm
DxxxQL, DxxxWL	457 mm	457 mm	115 mm	70 mm	487 mm
DxxxQX, DxxxWX	610 mm	610 mm	137 mm	90 mm	640 mm
DxxxRS	300 mm	240 mm	80 mm	44 mm	330 mm
DxxxRR	400 mm	300 mm	86 mm	50 mm	430 mm
DxxRL	500 mm	400 mm	86 mm	48 mm	530 mm
DxxxRX	650 mm	500 mm	110 mm	73 mm	695 mm
DxxxRV	800 mm	600 mm	120 mm	83 mm	840 mm

*For leveling purposes, the feet may be extended up to an additional 15 mm.

Accessories

TABLE 4. ACCESSORIES

Description	Part Number
Base Mount Kit, painted steel	80500722
Column Kit, 35 cm painted steel	80500723
Column Kit, 68 cm painted steel	80500724
Column Kit, 35 cm stainless steel	80500725
Column Kit, 68 cm stainless steel	80500726
Load Cell Cable Adapter Kit	80500736

LIMITED WARRANTY

Ohaus products are warranted against defects in materials and workmanship from the date of delivery through the duration of the warranty period. During the warranty period Ohaus will repair, or, at its option, replace any component(s) that proves to be defective at no charge, provided that the product is returned, freight prepaid, to Ohaus. This warranty does not apply if the product has been damaged by accident or misuse, exposed to radioactive or corrosive materials, has foreign material penetrating to the inside of the product, or as a result of service or modification by other than Ohaus. In lieu of a properly returned warranty registration card, the warranty period shall begin on the date of shipment to the authorized dealer. No other express or implied warranty is given by Ohaus Corporation. Ohaus Corporation shall not be liable for any consequential damages.
As warranty legislation differs from state to state and country to country, please contact Ohaus or your local Ohaus dealer for further details.

Ohaus Corporation
19A Chapin Road
P.O. Box 2033
Pine Brook, NJ 07058-2033, USA
Tel: (973) 377-9000
Fax: (973) 944-7177

With offices worldwide.
www.ohaus.com

P/N 80251421 B © Ohaus Corporation 2008, all rights reserved.

Printed in China